

SECTION:A-A

(SCALE-1:4)

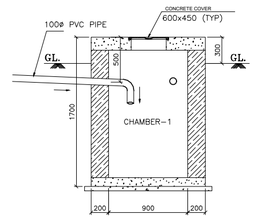

SECTION:B-B

(SCALE-1:4)

OIL INTERCEPTOR

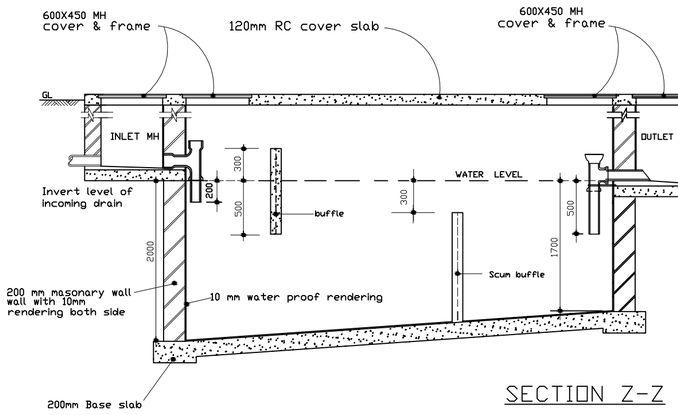

SECTION Z-Z

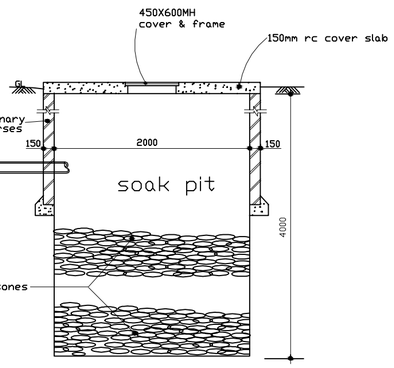

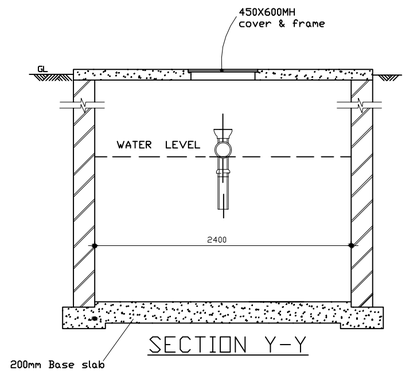

SECTION Y-Y

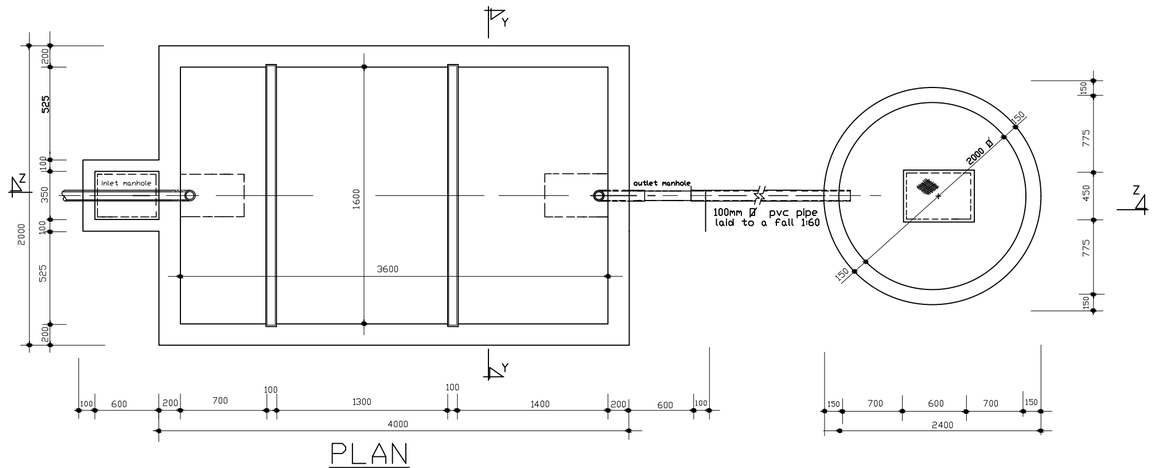

PLAN

NOTES

1 Cover slab to be reinforced with Y10 bars both ways conc. class 20(20)

2 Base slab to be conc. class mix 1:3:6

3 Outlet & inlet pipes to be 100 mm ø cast iron

4 Scum buffle to be 100mm thick reinforced with 2No.Y10 at both end conc. 20(20)

5 dividing wall to be to be 100mm thick reinforced with weld-mesh.

	DATE	SIGN
APPROVED D.D.M.		
CHECKED ENGINEER I/C		
CHECKED P/D'MAN		
RE-DRAWN		
TRACED		

REF.	REVISION	DATE	SIGN	CHECKED	DATE
1					
2					
3					
4					
5					
6					

SEPTIC TANK & SOAKPIT & OIL INTERCEPTOR

SCALE 1:25 UNLESS OTHERWISE STATED

CONSULTANT.

KENYA POWER & LIGHTING COMPANY.

K. P. & L Co. LTD

SK. No. 11260

Sheet:18